California Polytechnic State University Pomona
DEPARTMENT OF ELECTRICAL & COMPUTER ENGINEERING

Intro to Microelectronics Laboratory

ECE 2200L
Report #11

LAB 11 – Switching characteristics of a Bipolar Junction Transistor

Prepared by
Elias Cortes & Kevyn Santos

Presented to
Aspet Gharakhanian

April 24, 2025

Introduction:

Our objective during this lab is to study the large signal switching characteristics of a BJT in the time domain as it is driven into on and off states. We will observe the rise, fall, off-to-on, and on-to-off times. We will do this at 1k, 3.3k, 1k with schottky diode, and 3.3k with schottky diode.

Parts List:

1. Resistors: 330 [Ω], 1 [kΩ], 3.3 [kΩ]
2. Transistors: 2N3904 (BJT)
3. Diodes: BAT41 Schottky Diode

Circuit Schematic:

Part 1:

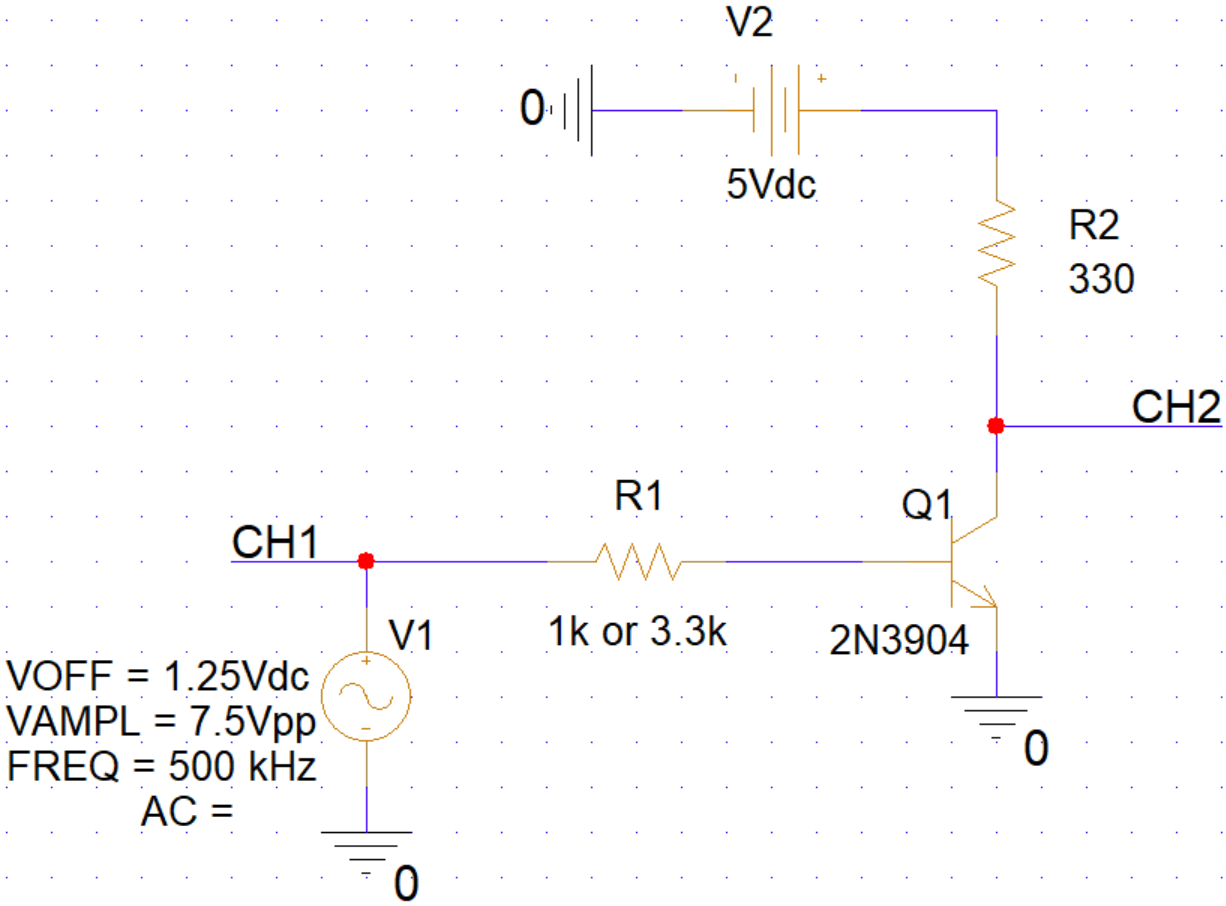

Fig. 1. Circuit schematic followed during Part 1 of the lab.

Part 2:

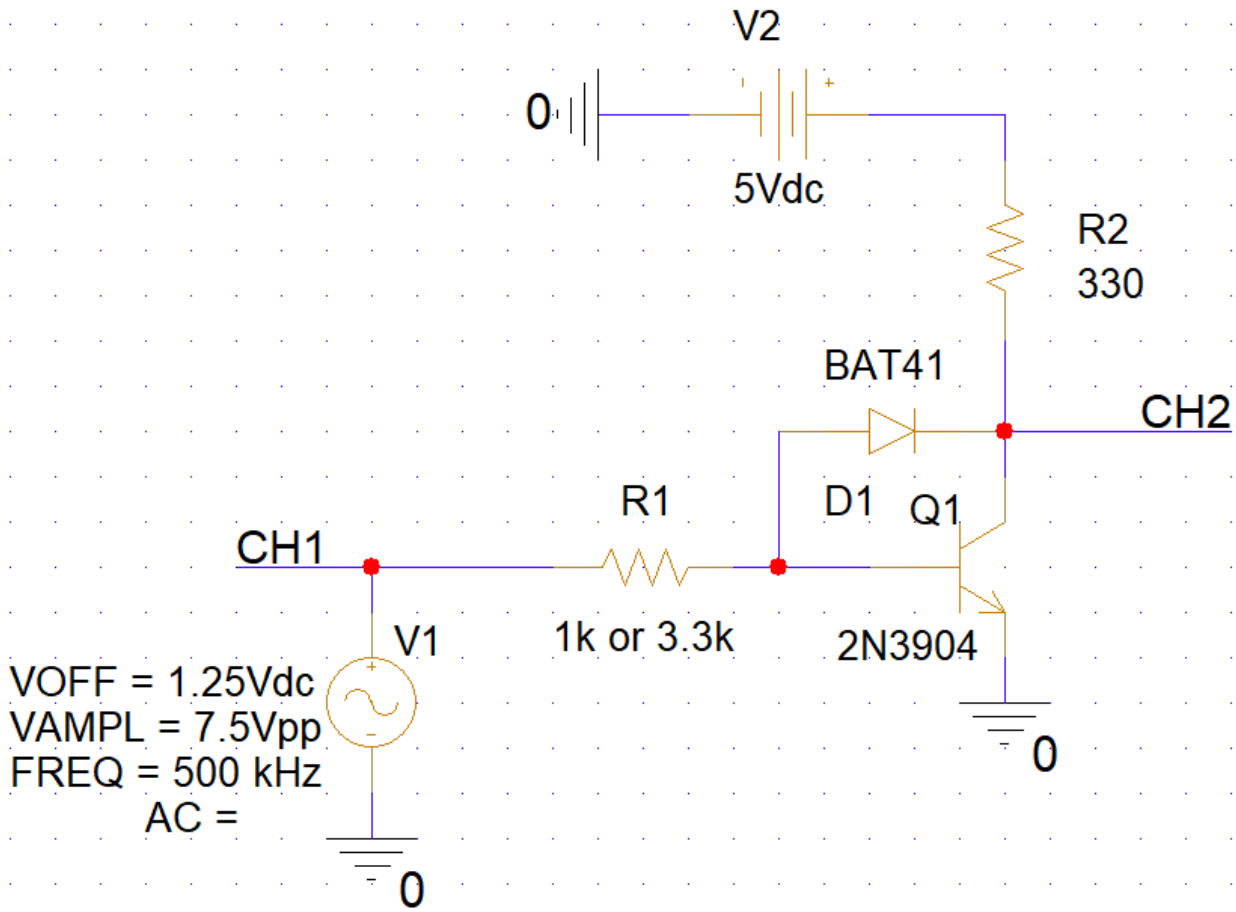

Fig. 2. Circuit schematic followed during Part 2 of the lab.

Experimental Data:

Part 1:

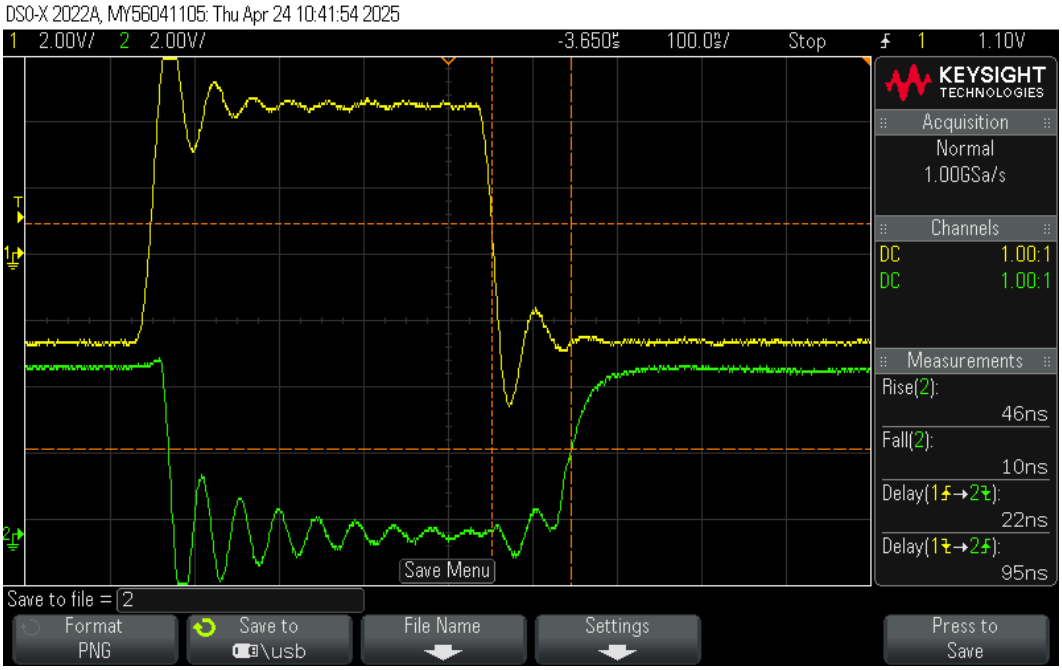

Fig. 3. Oscilloscope capture of V_{in} vs. V_o graph obtained during Part 1 of the lab with a 1k resistor.

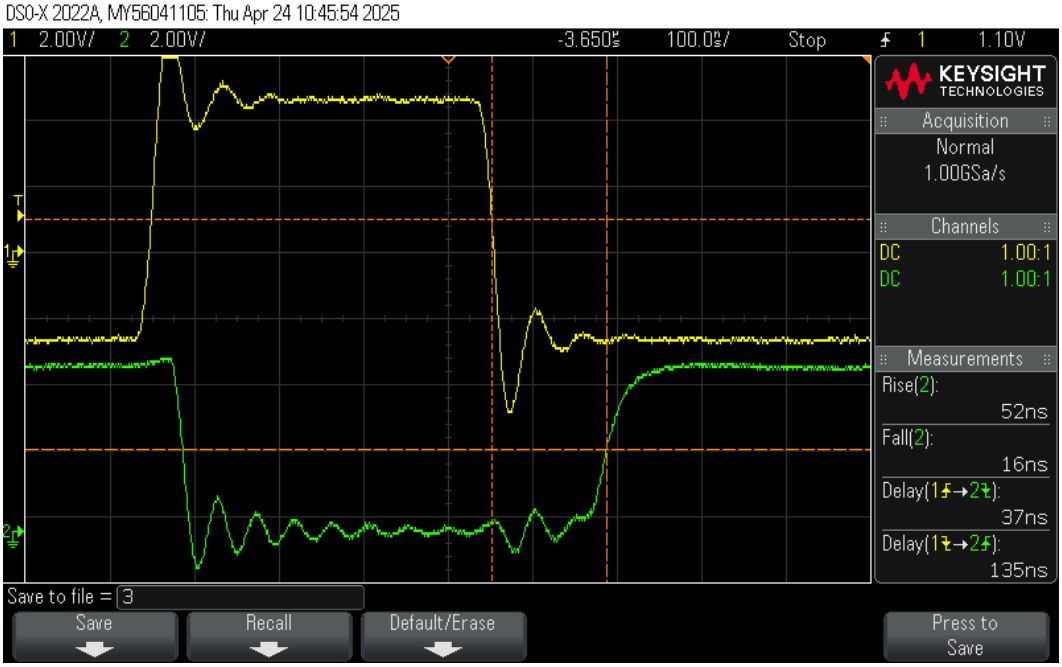

Fig. 4. Oscilloscope capture of V_{in} vs. V_o graph obtained during Part 1 of the lab with a 3.3k resistor.

R_B	T_d	T_r	T_s	T_f	T_{on}	T_{off}	Bit rate
1kΩ	22ns	46ns	95ns	10ns	68ns	105ns	9.52 Mbps
3.3kΩ	37ns	52ns	135ns	16ns	89ns	151ns	6.62 Mbps

Table 1. Data gathered and calculated during Part 1 of the lab.

Part 2:

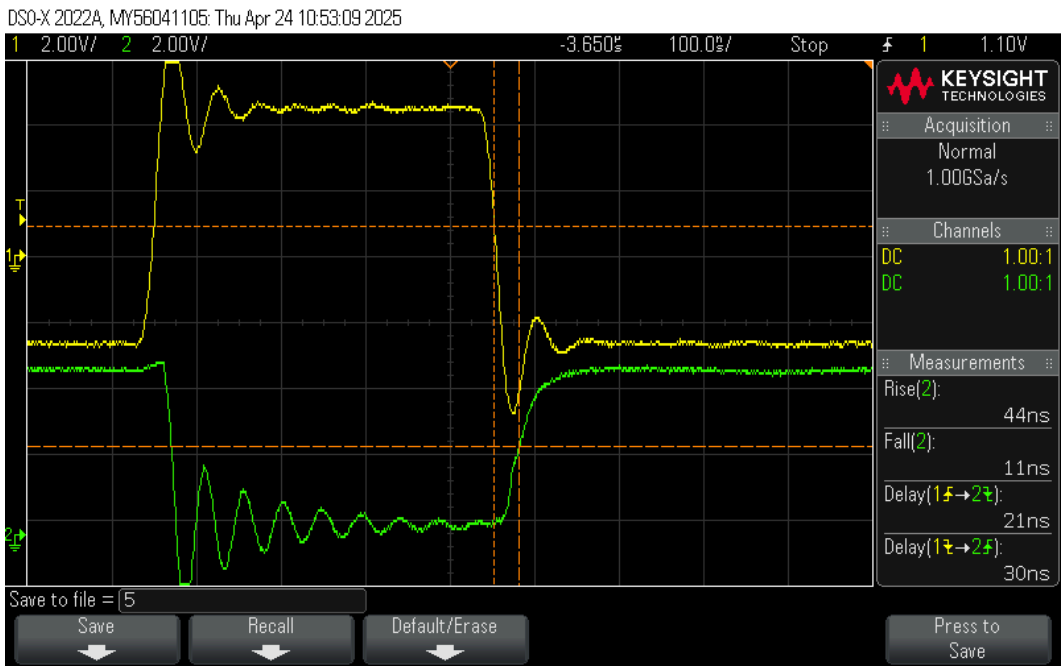

Fig. 5. Oscilloscope capture of V_{in} vs. V_o graph obtained during Part 2 of the lab with a 1k resistor and Schottky diode.

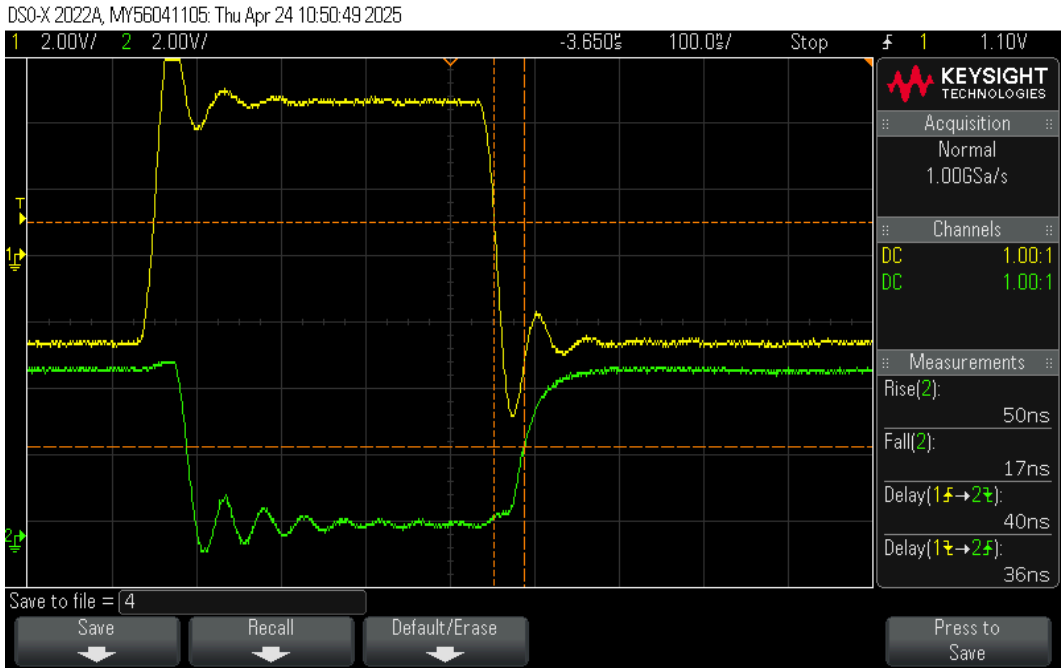

Fig. 6. Oscilloscope capture of V_{in} vs. V_o graph obtained during Part 2 of the lab with a 3.3k resistor and Schottky diode.

R_B	T_d	T_r	T_s	T_f	T_{on}	T_{off}	Bit Rate
1kΩ	21ns	44ns	30ns	11ns	65ns	41ns	15.38 Mbps
3.3kΩ	40ns	50ns	36ns	17ns	90ns	53ns	11.11 Mbps

Table 2. Data gathered and calculated during Part 2 of the lab.

Conclusion:

During part 1 of the lab, we observed that rise and fall times were very similar, with the 3.3k circuit having both values higher by 6 nanoseconds. When comparing their delay and storage times, it was obvious that the 3.3k circuit had relatively higher values. In the end of part 1, the 1k circuit had a much smaller turn-on time and turn-off time than the 3.3k circuit, but it was still relatively high. During part 2 of the lab, we noticed that the rise and fall times also had a difference of 6 nanoseconds. We also noticed that the delay and storage times were much smaller than part 1. This was due to the Schottky diode. At the end of part 2, we noticed much smaller turn-off times and a relatively similar turn-on time, but only for the 3.3k circuit. Overall, we were able to successfully study and confirm the switching characteristics of a BJT in the time domain.